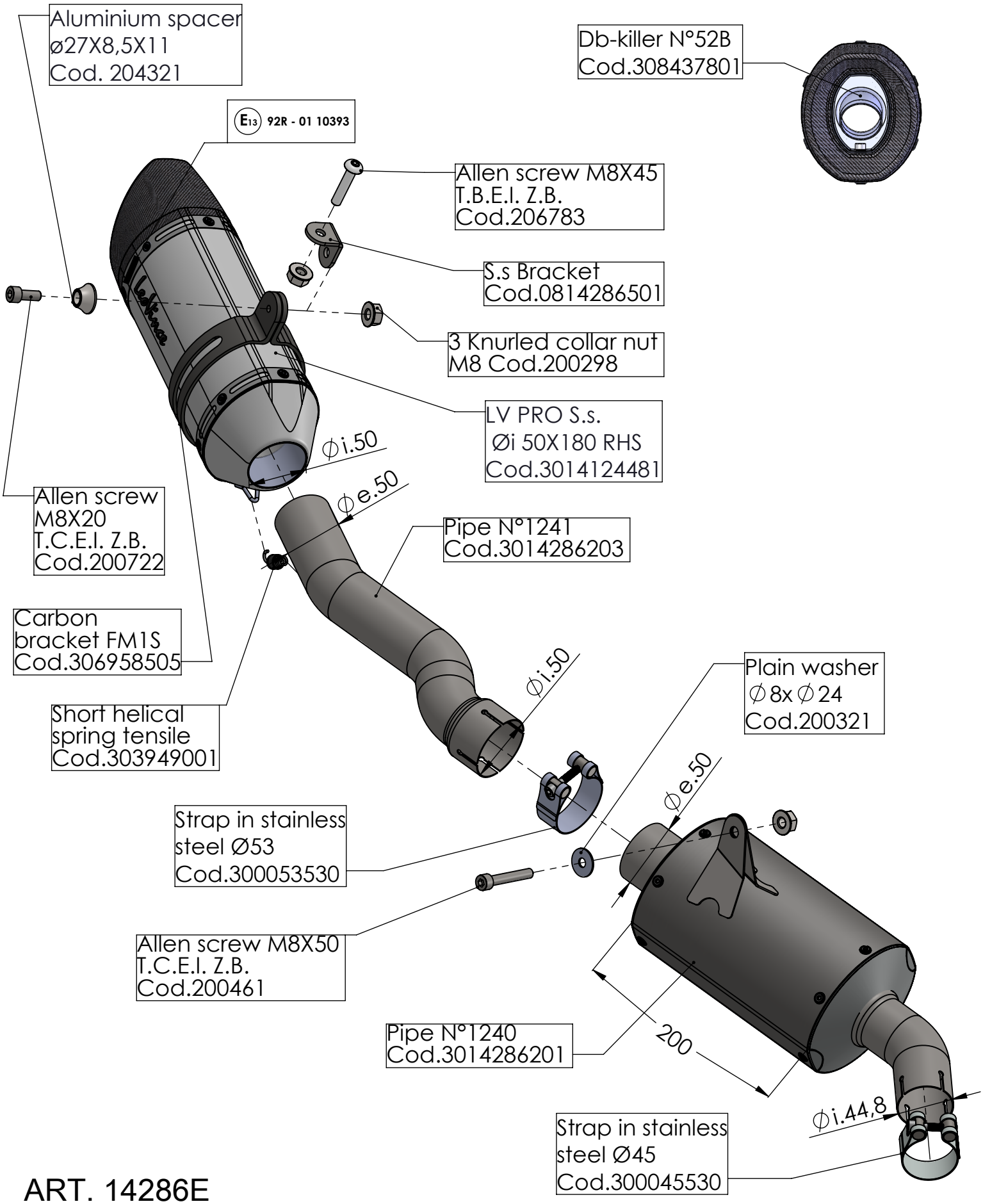

ART. 14286E

TRIUMPH STREET TRIPLE 765 S/SA2/R/R LRH/RS

SLIP-ON - LV PRO - STAINLESS S. - APPROVED